SPECIFICATION APPLIED

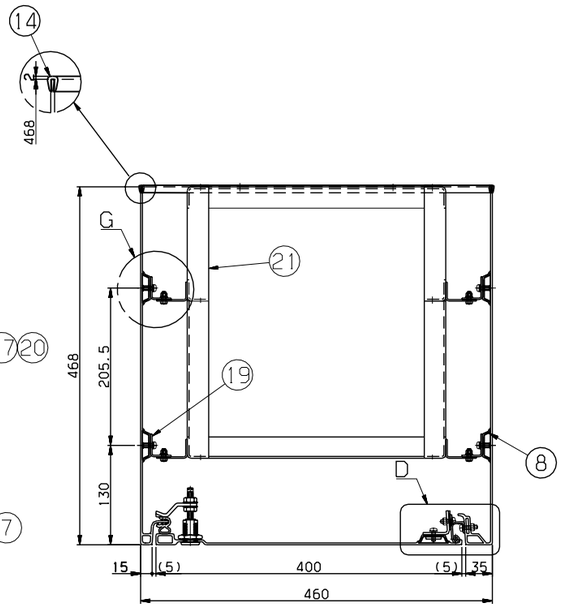

SECTION B-B

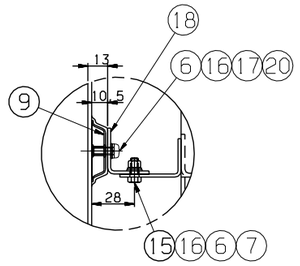

DETAIL G
SCALE=1/2

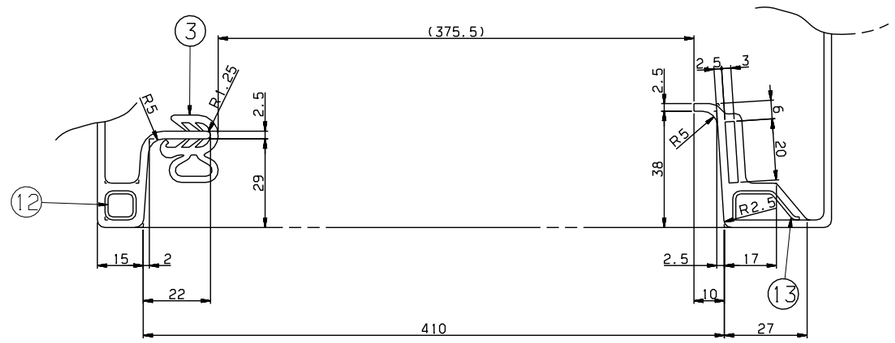

SECTION C-C
SCALE=1/1
(BEFORE COVER, INSPECTION FITTING)

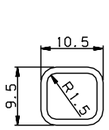

DETAIL 12
SCALE=2/1

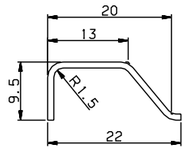

DETAIL 11, 13
SCALE=2/1

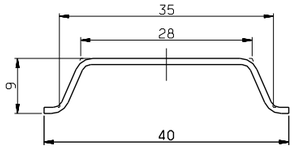

DETAIL 8, 9, 10
SCALE=2/1

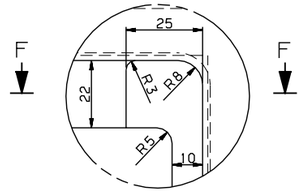

DETAIL E
SCALE=1/1

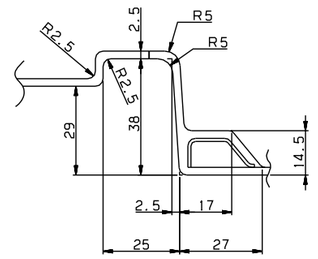

SECTION F-F
SCALE=1/1

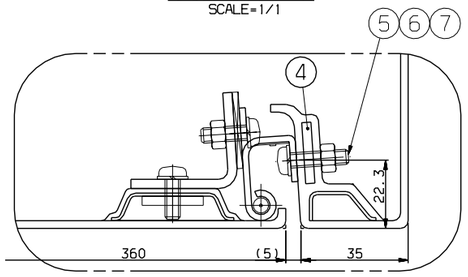

DETAIL D
SCALE=1/1

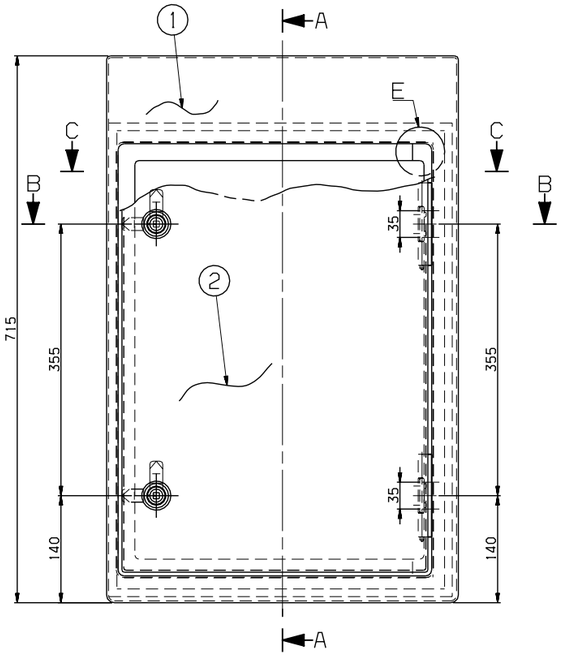

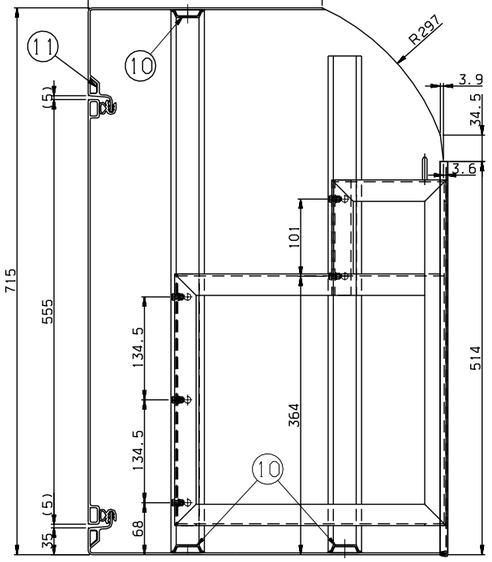

SECTION A-A

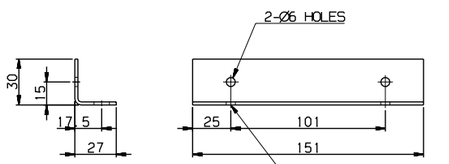

DETAIL 18
SCALE=1/2

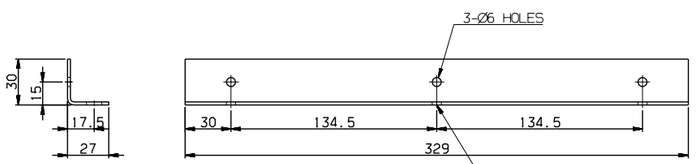

DETAIL 19
SCALE=1/2

NOTE
1. UNDIRECTED CORNER RADIUSES SHOULD BE APPLIED BY R=2.5mm.
2. SHALL BE SAME COLOR AS INTERIOR PANEL.

NO.	PART NO.	DESCRIPTION	MATERIAL	Q'TY	V.T	REMARKS
21	RFP57019AN0	FRAME, TMS	ASSY	1		
20	RFP57018AN0-020	NUT, SERT	SUS304	10		COHAMA, A-M5-01S
19	RFP57018AN0-019	BRACKET	SUS304	2		T2
18	RFP57018AN0-018	BRACKET	SUS304	2		T2
17	RS60606-147S	SCREW, P.H	SUS304	10		M5X14
16	RS60807-008S	WASHER, PLAIN	SUS304	20		M5
15	RS60114-043S	BOLT, HEX	SUS304	10		M5X16
14	RFP57018AN0-014	PROTECTOR, EDGE	ASSY	1		RFP90002AN0, L=1488
13	RFP57018AN0-013	STIFFENER	A1050P	1		T1, L=620
12	RFP57018AN0-012	STIFFENER	A1050P	1		T1, L=620
11	RFP57018AN0-011	STIFFENER	A1050P	2		T1, L=428.5
10	RFP57018AN0-010	STIFFENER	A1050P	3		T1, L=437
9	RFP57018AN0-009	STIFFENER	A1050P	2		T1, L=650
8	RFP57018AN0-008	STIFFENER	A1050P	2		T1, L=710
7	RS60401-006S	NUT, HEX	SUS304	16		M5
6	RS60801-005S	WASHER, SPRING	SUS304	26		M5
5	RS60606-149S	SCREW, P.H	SUS304	6		M5X20
4	RFP57018AN0-004	SEAT, TAP	SUS304	2		T3X20X80
3	RFP57018AN0-003	RUBBER, WATHER STRIP	ASSY	1		RFP57021AN0, L=1800
2	RFP57020AN0	COVER, INSPECTION	ASSY	1		
1	RFP57018AN0-001	PANEL	FRP	1		T2.5

일반공차 GENERAL TOLERANCE			
구분 GRADE	A	B	C
주물, 부품용 CASTING (±)			
~20M	8	16	24
~15M	7	12	21
~12M	6	10	18
~8M	5	8	14
~4M	4	6	11
~2M	3	4	8
~1M	2	3	6
~315	1	2	4
~120	1	2	3
~30	1	1	1
용접 구조용 WELDING (±)			
~20M	-	6.0	8.0
~15M	-	5.0	7.0
~12M	-	4.0	6.0
~8M	-	3.0	5.0
~4M	0.8	2.0	4.0
~2M	0.5	1.2	3.0
~1M	0.3	0.8	2.0
~315	0.2	0.5	1.2
~120	0.15	0.3	0.8
~30	0.1	0.2	0.5
1~6	0.05	0.1	0.2
구분 GRADE	A	B	C
기계 가공용 MACHINING (±)			
주강제품용 일반공차용 GENERAL TOLERANCE			

기호 MARK	일자 DATE	변경 내역 DETAIL OF REVISION(E.C ZONE)	설변번호 E.C NO.	설계 DGN	검도 CHK	승인 APP
기호 MARK	일자 DATE	변경 내역 DETAIL OF REVISION(E.C ZONE)	설변번호 E.C NO.	설계 DGN	검도 CHK	승인 APP

승인 APP	H.G.RYU 2009.01.21	재질 MAT'L	
검도 CHK	H.S.KIM 2009.01.21	중량 G.W	
설계 DGN	Y.D KIM 2009.01.19	일정 계획 MC / MD / CT	B / B / B
제도 DRG	S.M PARK 2009.01.19	SIZE	A1

명칭 TITLE	COVER, TMS, ASSY
도번 DRG. NO	RFP57018AN0
Ver.	00
Rev.	--
SCALE	1/4
SHEET	1 of 1

08-3D5101 | RFP- | 넌-PRJT | 참리본송 CATIA

HYUNDAI Rotem 현대로템주식회사

본 도면은 당사 재산권에 해당하며 무단복사/배포 금지됨. PROPERTY OF ISSUING ENTITY. CANNOT BE DISTRIBUTED OR REPRODUCED WITHOUT AUTHORIZATION.